BJELIN

Moulding

□□
□□□□
Natural

□□□□□□□□□□□□□□ PEFC □□□□□□□□□□□□□□□□□□□□□□□□ □□□□□□□□□□□□□□□□□□□□□□□□□□□□□□□□□□□□

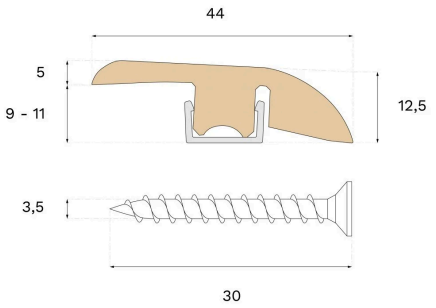

□□

□□□□	
□□	□□□
□□□□	**Natural**
□□□□	**Lacquer**

□□	
□	**2400 mm**

MISC.	
Core material	**Spruce**
□□	**12 mm**
□□	**44 mm**
□□	□□□
□□□□	**Woodura Planks 3.0 Pro Matte Lacquer**

Bjelin□□ bjelin.com chinainfo@valinge.se +86 21 522 822 62

Copyright 2025 Bjelin Sweden AB. Weights and dimensions may have minor variations depending on external circumstances. Bjelin reserves the right to deviate from the weight and dimensions in this technical data sheet. Technologies mentioned may be subject to patent protection and invented by Välinge Innovation AB (www.valinge.se/patents). Use of trademarks herein owned by Bjelin Sweden AB or Välinge Innovation AB is under license.

□□□□□□□□□□□□□□□□□□□